DAKTRONICS DA-1001 PRODUCT SPECIFICATIONS

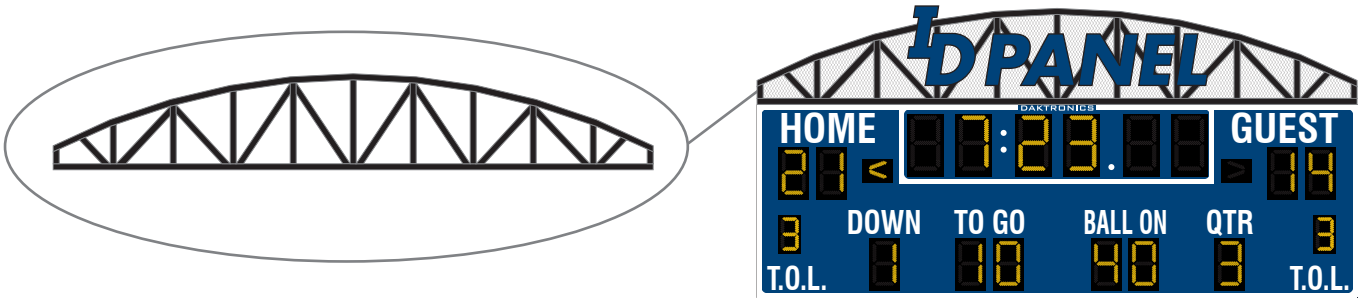

DA-1001-25 with FB-2023

Enhance the appearance of any outdoor display with arch truss decorative accent. Constructed of painted aluminum tubing and flat crossbars, truss can be added to the top or bottom of the display. Truss is shown above a scoreboard and features optional lettering along with screen backing as required for this option.

MODEL	HEIGHT	WIDTH	DEPTH	WEIGHT
DA-1001-12	2'-0" (610 mm)	12'-0" (3.66 m)	3" (76 mm)	120 lb (54 kg)
DA-1001-14	3'-0" (914 mm)	14'-0" (4.27 m)	3" (76 mm)	170 lb (77 kg)
DA-1001-15	3'-0" (914 mm)	15'-0" (4.57 m)	3" (76 mm)	180 lb (82 kg)
DA-1001-16	3'-0" (914 mm)	16'-0" (4.88 m)	3" (76 mm)	185 lb (84 kg)
DA-1001-18	3'-0" (914 mm)	18'-0" (5.49 m)	3" (76 mm)	225 lb (102 kg)
DA-1001-20	3'-0" (914 mm)	20'-0" (6.10 m)	3" (76 mm)	240 lb (109 kg)
DA-1001-25	4'-0" (1.22 m)	25'-0" (7.62 m)	3" (76 mm)	340 lb (154 kg)
DA-1001-32	5'-0" (1.52 m)	32'-0" (9.75 m)	3" (76 mm)	465 lb (211 kg)
DA-1001-36	5'-0" (1.52 m)	36'-0" (10.97 m)	3" (76 mm)	500 lb (227 kg)

COLOR
Choose from 150+ colors (from Martin Senour® paint book) at no additional cost.

CONSTRUCTION
Durable aluminum tubing

MOUNTING
Truss is typically mounted on vertical beams. The number of vertical beams is determined by the length of the overall display: -12/-14/-15/-16/-18/-20 use two vertical beams, -25 may use two or three vertical beams and -32/-36 may use three or four vertical beams. Hardware to mount truss on the allotted number of beams is included; hardware for more beams is at additional cost.

OPTIONS
- Lettering and logo sheet metal cutouts
- Screen backing

LETTERING & LOGOS
Lettering and logos should avoid exceeding 14" (356 mm) above the truss or covering more than 50% of the truss, otherwise additional costs will be incurred. Screen backing is required when lettering and logos are attached to truss.

GENERAL INFORMATION
Truss is shipped in one section. Specifications and pricing are subject to change without notice.

FOR ADDITIONAL INFORMATION
- Pole Location Drawing: DWG-1122070 (attached)
- I-Beam Mounting Drawing: DWG-3917819 (attached)
- Pole Mounting Drawing: DWG-4619972 (attached)
- Installation Manual: ED-16076 (online)

WWW.DAKTRONICS.COM E-MAIL: SALES@DAKTRONICS.COM

Martin Senour® is a registered trademark of its owner.
 Copyright © 2003-2020 Daktronics, Inc.

DAKTRONICS

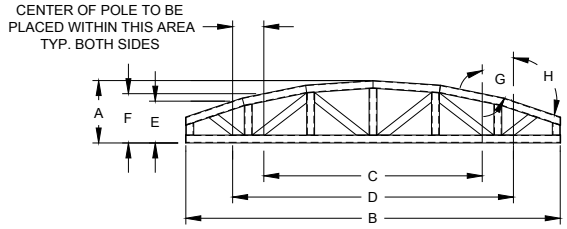

TWO POLE TRUSS
MOUNTING

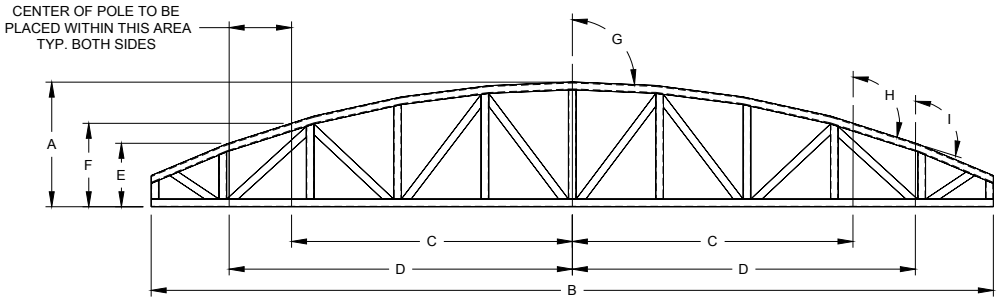

THREE POLE TRUSS
MOUNTING

TWO POLE TRUSS MOUNTING TABLE

MODEL NUMBER	HEIGHT Dim. A	WIDTH Dim. B	POLE SPACE MIN Dim. C	POLE SPACE MAX Dim. D	POLE HEIGHT Dim. E	POLE HEIGHT Dim. F	ANGLE Dim. G	ANGLE Dim. H	POSSIBLE TO POSITION POLE BEHIND VERTICAL TRUSS MEMBER
DA-1001-12	2'-0"	12'-0"	7'-0"	9'-0"	1'-4"	1'-6 15/16"	102°	109°	YES
DA-1000-14	2'-0"	14'-0"	9'-0"	11'-0"	2'-0"	2'-0"	NA	NA	YES
DA-1001-14	3'-0"	14'-0"	9'-0"	11'-0"	1'-10 11/16"	2'-3 7/16"	104°	114°	YES
DA-1000-16	2'-0"	16'-0"	9'-6"	11'-6"	2'-0"	2'-0"	NA	NA	YES
DA-1001-16	3'-0"	16'-0"	9'-6"	11'-6"	2'-2 13/16"	2'-6 3/16"	106°	106°	NO
DA-1000-18	2'-0"	18'-0"	11'-0"	13'-0"	2'-0"	2'-0"	NA	NA	NO
DA-1001-18	3'-0"	18'-0"	11'-0"	13'-0"	1'-11 5/8"	2'-3 5/16"	103°	108°	YES
DA-1000-20	2'-0"	20'-0"	12'-0"	14'-0"	2'-0"	2'-0"	NA	NA	NO
DA-1001-20	3'-0"	20'-0"	12'-0"	14'-0"	2'-0 5/16"	2'-3 9/16"	101°	106°	YES
DA-1001-24	4'-0"	24'-0"	14'-0"	16'-0"	2'-9 1/16"	3'-0 11/16"	103°	109°	YES
DA-1000-25	3'-0"	25'-0"	14'-0"	16'-0"	3'-0"	3'-0"	NA	NA	NO
DA-1001-25	4'-0"	25'-0"	14'-0"	16'-0"	2'-9 11/16"	3'-0 15/16"	103°	109°	YES
DA-1000-27	2'-0"	27'-0"	14'-6"	16'-6"	2'-0"	2'-0"	NA	NA	TBD
DA-1001-27	4'-0"	27'-0"	14'-6"	16'-6"	2'-10 15/16"	3'-1 5/8"	102°	107°	YES
DA-1000-28	3'-0"	28'-0"	14'-6"	16'-6"	3'-0"	3'-0"	NA	NA	NO
DA-1001-28	4'-0"	28'-0"	14'-6"	16'-6"	2'-11 3/4"	3'-2 3/8"	102°	106°	NO

THREE POLE TRUSS MOUNTING TABLE

MODEL NUMBER	HEIGHT Dim. A	WIDTH Dim. B	POLE SPACE MIN Dim. C	POLE SPACE MAX Dim. D	POLE HEIGHT Dim. E	POLE HEIGHT Dim. F	ANGLE Dim. G	ANGLE Dim. H	ANGLE Dim. I	POSSIBLE TO POSITION POLE BEHIND VERTICAL TRUSS MEMBER
DA-1000-25	3'-0"	25'-0"	8'-6"	8'-6"	3'-0"	3'-0"	NA	NA	NA	NO
DA-1001-25	4'-0"	25'-0"	8'-6"	8'-6"	2'-7 11/16"	2'-7 11/16"	93°	109°	109°	NO
DA-1000-27	2'-0"	27'-0"	9'-0"	11'-0"	2'-0"	2'-0"	NA	NA	NA	TBD
DA-1001-27	4'-0"	27'-0"	9'-0"	11'-0"	2'-0 7/16"	2'-8 1/8"	93°	107°	113°	NO
DA-1000-28	3'-0"	28'-0"	9'-6"	11'-6"	3'-0"	3'-0"	NA	NA	NA	YES
DA-1001-28	4'-0"	28'-0"	9'-6"	11'-6"	2'-0 1/8"	2'-7 7/16"	92°	107°	112°	YES
DA-1000-32	4'-0"	32'-0"	10'-6"	12'-6"	4'-0"	4'-0"	NA	NA	NA	NO
DA-1001-32	5'-0"	32'-0"	10'-6"	12'-6"	2'-7 7/16"	3'-3 13/16"	93°	109°	109°	NO
DA-1000-36	3'-0"	36'-0"	12'-0"	14'-0"	3'-0"	3'-0"	NA	NA	NA	NO
DA-1001-36	5'-0"	36'-0"	12'-0"	14'-0"	2'-7 7/16"	3'-2 13/16"	92°	107°	107°	YES

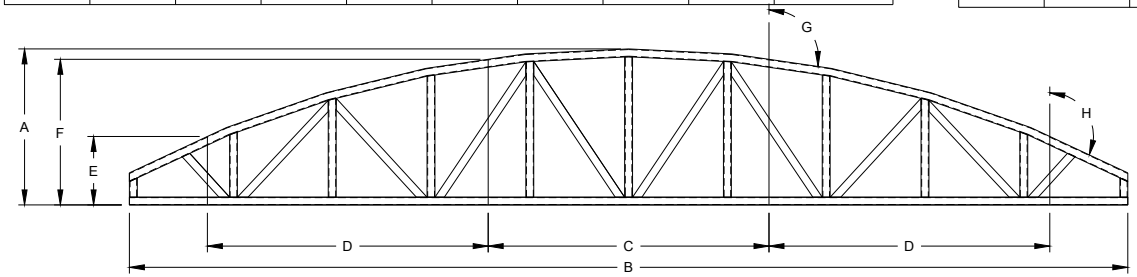

FOUR POLE TRUSS
MOUNTING

FOUR POLE TRUSS MOUNTING TABLE

MODEL NUMBER	HEIGHT Dim. A	WIDTH Dim. B	POLE SPACE Dim. C	POLE SPACE Dim. D	POLE HEIGHT Dim. E	POLE HEIGHT Dim. F	ANGLE Dim. G	ANGLE Dim. H	POSSIBLE TO POSITION POLE BEHIND VERTICAL TRUSS MEMBER
DA-1000-32	4'-0"	32'-0"	9'-0"	9'-0"	4'-0"	4'-0"	NA	NA	NO
DA-1001-32	5'-0"	32'-0"	9'-0"	9'-0"	1'-11 5/16"	4'-8"	98°	115°	NO
DA-1000-36	3'-0"	36'-0"	9'-0"	9'-0"	3'-0"	3'-0"	NA	NA	NO
DA-1001-36	5'-0"	36'-0"	9'-0"	9'-0"	2'-9 1/4"	4'-8 13/16"	97°	107°	NO

NOTES:

- FOR AESTHETIC PURPOSES SPACE POLES OF DISPLAY SO THEY ARE IN LINE WITH VERTICALS OF TRUSS WHEN POSSIBLE.

- DRAWING TABLES CONTAIN DIMENSIONS FOR SQUARE DECORATIVE TRUSSES.
SQUARE - DA-1000
ARCHED - DA-1001

- DIMENSIONS G, H, I WILL NOT APPLY TO SQUARE TRUSSES.

-DIMENSIONS E AND F ARE SHOWN TO GIVE AN APPROXIMATE HEIGHT OF THE POLES. ACTUAL POLE HEIGHT WILL NEED TO BE DETERMINED BASED ON THE POLE SPACING.

REV	DATE:		BY:
01	13 JAN 15	ADDED 28' TRUSS INFO TO TABLES	KDB

DAKTRONICS, INC.
BROOKINGS, SD 57006
DO NOT SCALE DRAWING

THE CONCEPTS EXPRESSED AND DETAILS SHOWN ON THIS DRAWING ARE CONFIDENTIAL AND PROPRIETARY. DO NOT REPRODUCE BY ANY MEANS WITHOUT THE EXPRESSED WRITTEN CONSENT OF DAKTRONICS, INC.
COPYRIGHT 2012 DAKTRONICS, INC.

PROJ: OUTDOOR DECROTIVE ACCENTS
TITLE: POLE LOCATIONS; DECORATIVE TRUSSES
DESIGN: KSCHNABEL | DRAWN: KSCHNABEL | DATE: 14 DEC 12
SCALE: 1/4" = 1'

SHEET	REV	JOB NO:	FUNC - TYPE - SIZE	
	01	P1348	E - 10 - B	1122070

CRITICAL
DO NOT USE ANY LUBRICANT
ON ANY MOUNTING HARDWARE
OR WARRANTY WILL BE VOIDED

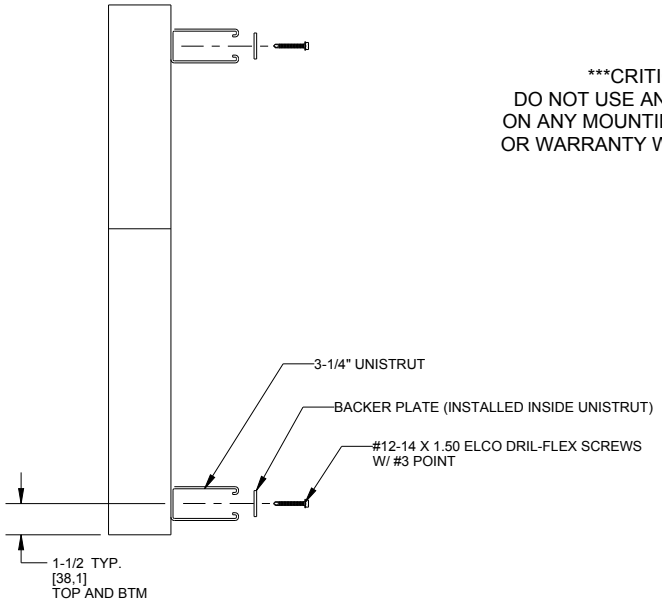

EXPLODED SIDE VIEW
UNISTRUT AND CHANNEL
ATTACHMENT
SCALE 1/6

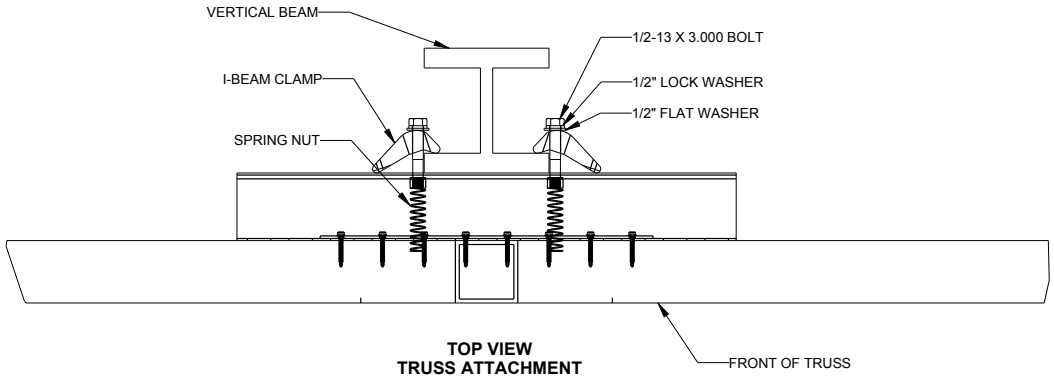

TOP VIEW
TRUSS ATTACHMENT
SCALE 1/6

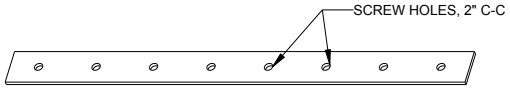

FRONT ROTATED VIEW
16X1.25X.125 ALUMINUM BACKER PLATE
SCALE 1/4

TO DETERMINE IF THE TRUSS BEING MOUNTED WILL EXCEED THE MAX ALLOWABLE LOAD PER CONNECTION TAKE THE WEIGHT OF THE TRUSS AND DIVIDE BY THE NUMBER OF CONNECTIONS.

THE DECORATIVE TRUSS SHALL NOT HAVE MORE THAN 50% OF THE FACE COVERED.

ADDITIONAL LETTERING/LOGOS SHALL NOT PROTRUDE MORE THAN 14" ABOVE THE TOP OF THE DECORATIVE TRUSS.

REFERENCE THE PRODUCT SPECIFICATION DOCUMENTS TO DETERMINE THE WEIGHT OF THE DA-1000, DA-1001, DA-1004, DA-1005, DA-1006, DA-1007, AND DA-1008 TRUSSES.
DA-1000: SL-08027
DA-1001: SL-08028
DA-1004: DD2581872
DA-1005: DD1457899
DA-1006: DD1457903
DA-1007: DD1792822
DA-1008: DD1792826

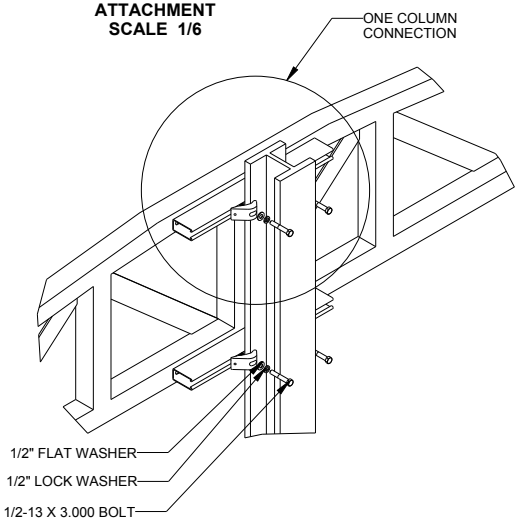

EXPLODED REAR ROTATED VIEW
TRUSS ATTACHEMENT
SCALE 1/15

STRUCTURAL NOTES:

ALLOWABLE LOADS PER COLUMN CONNECTION

MAX ALLOWABLE WEIGHT: 180 LBS
MAX WIND LOAD CAPACITY: 1400 LBS
COEFFICIENT OF FRICTION: 0.45
BOLT TORQUE: 40 FT-LB
MIN-MAX I-BEAM FLANGE THICKNESS: 3/16"-3/4"
NOTE: IF THE I-BEAM FLANGE THICKNESS IS GREATER THAN SPECIFIED, LONGER BOLTS WILL BE REQUIRED AT THE CUSTOMER'S EXPENSE. MAX LENGTH OF REPLACEMENT BOLT IS 3.5". MUST BE GRADE 5 MINIMUM.

MOUNTING INSTRUCTIONS:
1. ATTACH UNISTRUT TO THE TRUSS WITH BACKER PLATE (INSIDE) WITH SELF DRILLING SCREWS AS SHOWN IN THE UNISTRUT ATTACHMENT SIDE VIEW.
   ALL 8 SELF DRILLING SCREWS MUST BE USED PER CHANNEL.
   CHANNELS ARE TO BE CENTERED AT VERTICAL BEAM LOCATIONS.
2. PLACE SPRING NUTS INTO UNISTRUT IN APPROXIMATE LOCATION OF VERTICAL BEAMS.
3. LIFT TRUSS INTO POSITION.
4. ATTACH I-BEAM CLAMPS WITH 1/2" HARDWARE AS SHOWN IN TOP AND REAR ISOMETRIC VIEW TRUSS ATTACHMENT.
5. MAKE SURE THE 1/2-13 BOLTS ARE AS CLOSE TO THE I-BEAM FLANGES AS POSSIBLE.
6. WHEN TRUSS IS ADJUSTED TO FINAL DESIRED POSITION, TIGHTEN BOLTS FIRMLY.

0A-1348-1067
MTG HDWE; BEAM CLAMP, DECORATIVE TRUSSWORK, 1-POLE
THIS ASSEMBLY HAS ENOUGH FOR (2) COLUMN CONNECTIONS

REV	DATE:		BY:

THE CONCEPTS EXPRESSED AND DETAILS SHOWN ON THIS DRAWING ARE CONFIDENTIAL AND PROPRIETARY. DO NOT REPRODUCE BY ANY MEANS WITHOUT THE EXPRESS WRITTEN CONSENT OF DAKTRONICS, INC. OR ITS WHOLLY OWNED SUBSIDIARIES. COPYRIGHT 2018 DAKTRONICS, INC. (USA)

DAKTRONICS

THIRD ANGLE PROJECTION

PROJECT:	OUTDOOR DECORATIVE ACCENTS		
TITLE:	LXV TRUSS I-BEAM CLAMP MOUNTING		
DATE: 18-MAY-18	DIM UNITS: INCHES [MILLIMETERS]	SHEET	REV
SCALE: 1/15	DO NOT SCALE DRAWING	1 OF 1	00
DESIGN: KDRAGT	JOB NO.	FUNC - TYPE - SIZE	3917819
DRAWN: KDRAGT	P1348	E - 10 - B	

CRITICAL
DO NOT USE ANY LUBRICANT
ON ANY MOUNTING HARDWARE
OR WARRANTY WILL BE VOIDED

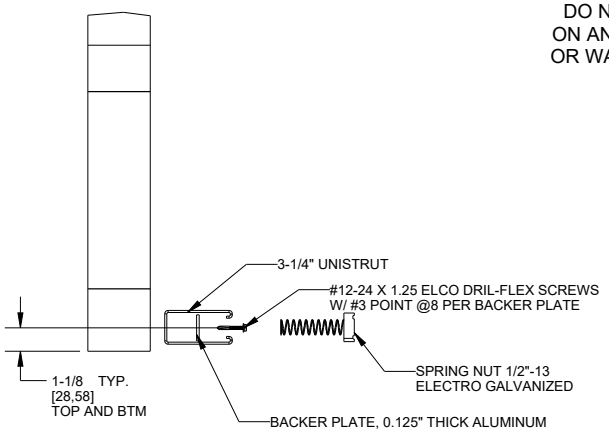

EXPLODED SIDE VIEW
UNISTRUT AND CHANNEL
ATTACHMENT
SCALE 1/6

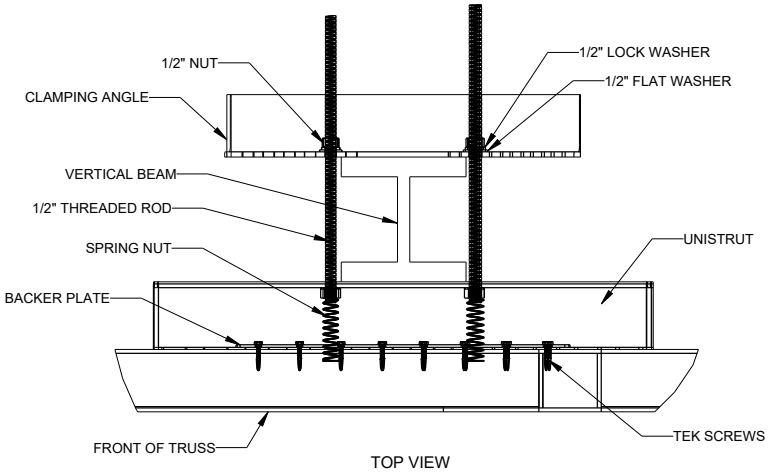

TOP VIEW
TRUSS ATTACHMENT
SCALE 1/6

TO DETERMINE IF THE TRUSS BEING MOUNTED WILL EXCEED THE
MAX ALLOWABLE LOAD PER CONNECTION TAKE THE WEIGHT
OF THE TRUSS AND DIVIDE BY THE NUMBER OF CONNECTIONS.

REFERENCE THE PRODUCT SPECIFICATION DOCUMENTS TO DETERMINE
THE WEIGHT OF THE DA-1001 AND DA-1000 TRUSSES.
DA-1001: SL-08028
DA-1000: SL-08027

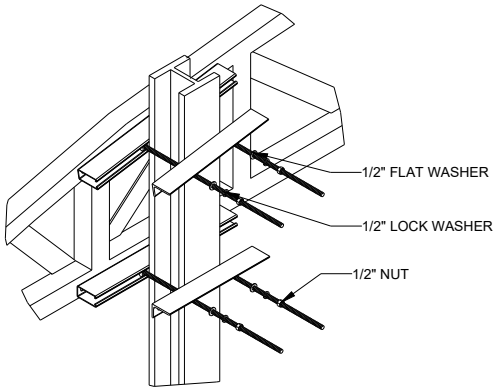

EXPLODED REAR ISOMETRIC VIEW
TRUSS ATTACHMENT
SCALE 1/15

STRUCTURAL NOTES:

ALLOWABLE LOADS PER COLUMN CONNECTION

MAX ALLOWABLE WEIGHT: 180 LBS
BOLT TORQUE: 40 FT-LB

MOUNTING INSTRUCTIONS:
1. -ATTACH THE PREDRILLED UNISTRUT WITH BACKER PLATE INSIDE OF IT TO THE TRUSS WITH SELF DRILLING SCREWS AS SHOWN IN THE UNISTRUT ATTACHMENT SIDE VIEW.
   -ALL 8 SELF DRILLING SCREWS MUST BE USED PER CHANNEL.
   -CHANNELS ARE TO BE CENTERED AT VERTICAL BEAM LOCATIONS.
2. PLACE SPRING NUTS INTO UNISTRUT IN APPROXIMATE LOCATION OF VERTICAL BEAMS.
3. LIFT TRUSS INTO POSITION.
4. ATTACH CLAMPING ANGLE WITH 1/2" HARDWARE AS SHOWN IN TOP AND REAR ISOMETRIC VIEW TRUSS ATTACHMENT.
5. MAKE SURE THE 1/2-13 NUTS ARE AS CLOSE TO THE I-BEAM FLANGES AS POSSIBLE.
6. WHEN TRUSS IS ADJUSTED TO FINAL DESIRED POSITION, TIGHTEN BOLTS FIRMLY.

0A-1348-0001
MTG HDWE; DECORATIVE TRUSSWORK, 1-POLE

REV:	DATE:	DESCRIPTION:	BY:

DAKTRONICS

THE CONCEPTS EXPRESSED AND DETAILS SHOWN ON THIS DRAWING ARE CONFIDENTIAL AND PROPRIETARY. DO NOT REPRODUCE BY ANY MEANS WITHOUT THE EXPRESS WRITTEN CONSENT OF DAKTRONICS, INC. OR ITS WHOLLY OWNED SUBSIDIARIES. COPYRIGHT 2020 DAKTRONICS, INC. (USA)

THIRD ANGLE PROJECTION

PROJECT:	OUTDOOR DECORATIVE ACCENTS		
TITLE:	MTG ATTACHMENT; TRUSS POLE MOUNTING		
DATE: 05-FEB-20	DIM UNITS: INCHES [MILLIMETERS]	SHEET	REV
SCALE: 1/60	DO NOT SCALE DRAWING	1 OF 1	00
DESIGN: KDMILLER	JOB NO.	FUNC - TYPE - SIZE	4619972
DRAWN: KDMILLER	P1348	F - 10 - B	